MicroRint
Service Manual

060-17
Revision 1.1 May 2003

©Micro Medical Limited, P.O. Box 6, Rochester, Kent ME1 2AZ

MicroRint Microcomputer - System Overview (Fig. 1)

The Micro Medical MicroRint is a data recording airways resistance meter consisting of the following items:

1. MicroRint microcomputer unit with graphic display
2. Micro Medical interrupter transducer.
3. 2 off caps.
4. Disposable filter.
5. Universal mains adapter.
6. Mouthpiece adapter.
7. Facemask.
8. Pressure calibration adapter.

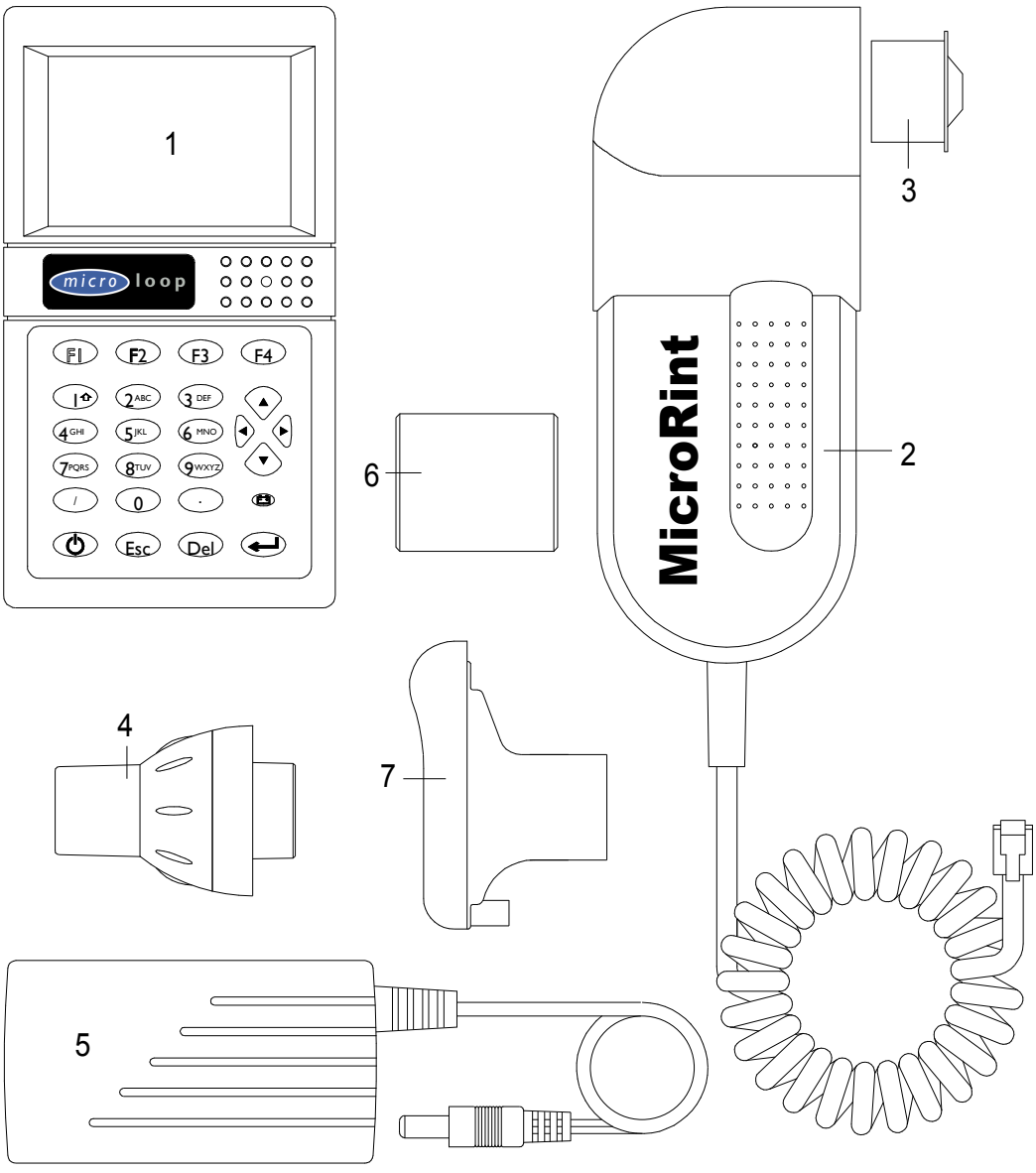

The MicroRint is powered by internal rechargeable Nickel Cadmium cells or by the mains adapter supplied.
The interrupter transducer is used to measure the subject's airways resistance in accordance with the operating manual.

Microcomputer Unit
(Refer to drawings 067-01 – 067-05, 067-11, and 067-12)

The microprocessor control circuit carries out the Rint test routines, monitors the transducer signals and keypad, and drives the display under the control of the program module.
The drawing 067-01 is a hierarchical block diagram showing the connections of the sub-sections. The rest of the drawings are sub-sections and are described in detail below.

Micro controller (067-02).

U9 is a Hitachi HD64F2318 16 bit microprocessor with 256K of flash memory and 8K of Ram. The system clock is supplied by 20MHz crystal (X2). There is also 512 Kbyte (U7) of external Ram used for running a module and storing variable data. The internal flash is used for the boot software, kernel and the base module. The kernel handles the low level interface to display, keyboard etc. and the base module runs on start-up and gives a choice of which module needs to be executed.

The modules are stored in the external 8 Mbyte Flash PROM (U5). The kernel also has a flash filing system which keeps track of all the files in the external Flash PROM. The files can be an executable Rint module or other module data. The filing system is similar to a PC Dos filing system.

U15 is used to control the access to the flash device.

The speaker J5 is directly connected to the Port pins and the pins are toggled at 1 KHz to generate the buzzing sound.

U9 is used for enabling the internal flash to be overwritten. If a new kernel is downloaded, the flash is enabled and data transferred.

U10 is the reset controller, which holds the reset line low for 350 ms on power up. This ensures that the supply has stabilised before the micro starts.

TR3 is used by the micro to hold the power supply ON whilst it is writing to the filing system. This is to ensure that data is not corrupted when it is writing and the power is turned off.

TR4 allows the micro to turn off the power and switch off the unit. This is normally done when the unit is left on for a long period of time. To preserve the battery, it turns it off.

Memory Map

0x000000	-	0x040000	256K	Internal Flash
0x400000	-	0x480000	512K	External Ram for modules
0x800000				Flash Prom (Single address used)
0xC00000				Display Controller
0xFFDC00 –		0xFFFBFF	8K	Internal Ram – stack.

Keypad interface (067 – 03)

The 26 keypad switches are arranged in a 5 X 5 matrix and a separate On/Off key. When the keypad is being read by the processor the 5 columns are sequentially driven low by the port lines PE0 – PE4. The state of the 5 rows is read by the port P40 – P44. The diodes in the keypad PCB isolate the outputs from the Port to ensure that a high current will not flow from an output set high to one set low if two keys are pressed simultaneously. The ON/OFF key is connected to the power control circuitry described in the **Power Supply** section.
Resistor RN1 ensures that the keys which are not pressed are read as high.

Serial interface (067-04)

The micro controller communicates with the PC or the printer via an RS232 serial interface at 38,4 Kbits per sec baud rate, with 8 bits data, 1 stop bit and no parity. U6 converts the RS232 signal to a logic signal of 3.3V. The micro controller has two inbuilt serial controllers, SCI0 and SCI1. SCI0 is used for synchronous data transfer whilst SCI1 is used in asynchronous mode for RS232.

Real Time Clock

U3 is a Xicor X1243 real time clock with 2Kbyte of EEPROM. It operates at 32.768 Khz and is powered by the lithium battery. The device requires a very small amount of power during standby mode and as the unit will never drain the battery out, this should be sufficient to keep the clock going for a long period of time before recharging. The date and time can be changed from the system menu.

The interface to the clock is via an I^2C bus. The micro controller does not have a dedicated I^2C bus, so two port lines (P20 – P21) are used under software to emulate the bus.

The EEPROM is used for storing the calibration value and other system data. If the device is ever replaced, the unit will have to be reconfigured and recalibrated.

Temperature Sensor

U20 is a Dallas DS18S20 temperature sensor operating on their one wire bus protocol. It has an accuracy of 0.5 degree centigrade. A port line P23 is used under software to emulate the one wire bus.

The ambient temperature reading is used for adjusting inspiratory flow at ambient temperature to respective flow at body temperature.

Transducer interface (067-05)

An SPI bus consisting of serial data in (SIN), serial data out (SOUT), and clock signals (SCLK) is used to interface with the 12-bit analogue to digital converter in the Rint transducer. The SEN signal activates the shutter.

Display (067-11)

The display is a high resolution custom graphic 240 by 120 dot LCD. It is controlled by an Epson SED1335 display controller (U16) which directly interfaces to the micro controller. The display controller timing is generated by a 10 MHz crystal (X3). U19 is a 32K byte RAM to hold the display data.

The LCD display is based on four planes, each requiring different plane voltage. It is biased by 22 V generated by DC-DC controller U17. VR1 varies this voltage which in turn changes the contrast. At dark level, the bias voltage is typically 22.6V and the plane voltages are 20.9V, 19.2V, 3.5V and 1.7V. Of course, they would be slightly different for different contrast level. The plane voltages are generated by resistor ratio dividers (R12, R13, R25, R14, R17) and buffered by quad Op-amps U18.
J2 is a connector to the display.

Power Supply (067-12)

The power to the system is either supplied by the 3.9V lithium battery or from an external 9V DC regulated power supply. If the external supply is connected, then TR5 is switched off and the battery is not used. R32 ensures that the battery is trickle charged at all times.

The on/off key is conditioned via U12 and applied to set/reset D type flip flop (U11). On every key press, the flip flop toggles between the on and off state. In the On state, TR7 is switched on, switching on TR6. The on state can be held by MC_ON- line from the micro controller whilst it is saving data in the Flash PROM. The micro controller can also switch the power off by means of the MC_OFF- line which resets U11.

U14 is a DC-DC converter with an input range of 0.9V to 10V and an output of 3.3 volts to power the unit. Since the range is up to 10V only, care should be taken not to use any other external power supply, as most of them are unregulated and could output 12V for a 9V unregulated supply.

U14 is another DC-DC converter with an output of 9V. This higher supply is used for powering the Rint transducer.

R28 and R31 divide the unregulated voltage to a third and are applied to the A/D converter of the micro controller. The micro controller continuously examines the reading and gives a battery low or battery dead warning message. From the reading the micro controller can also deduce that the external supply is connected, so it can turn itself off if the unit is left on for a long time.

Inductors L1 and L2 are placed for EMC filtering and D5 protects the unit from reverse polarity power supply

Disassembling the Interrupter Transducer for Circuit Investigation

1. Disconnect the Interrupter Transducer from the MicroRint Computer
2. Remove the three case screws and put to one side.

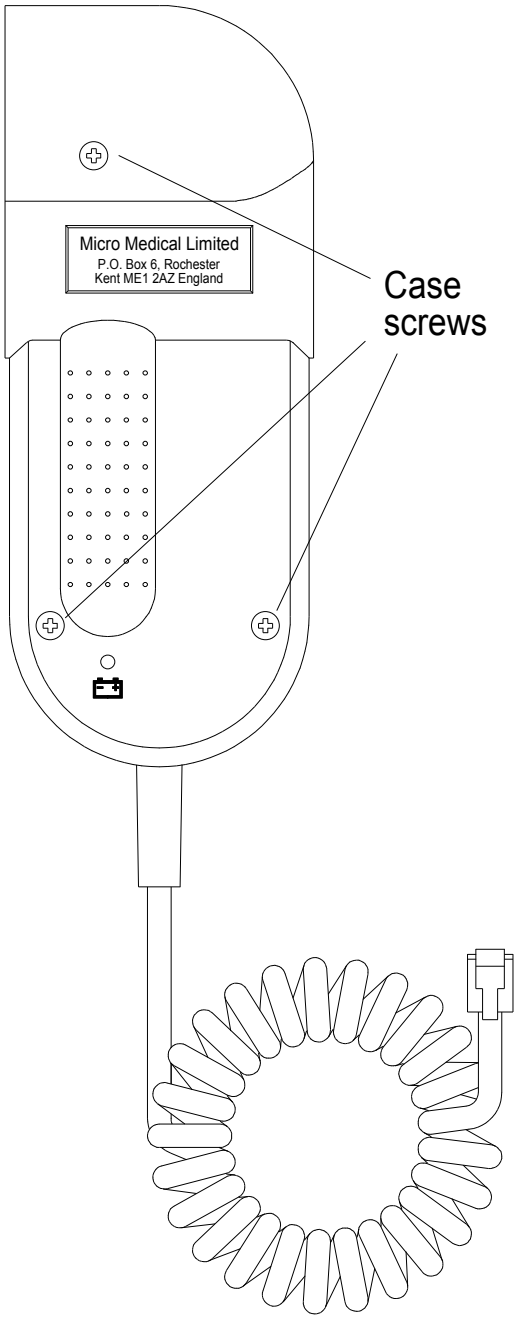

3. Turn the transducer over and ease the moulding apart to reveal the circuitry:

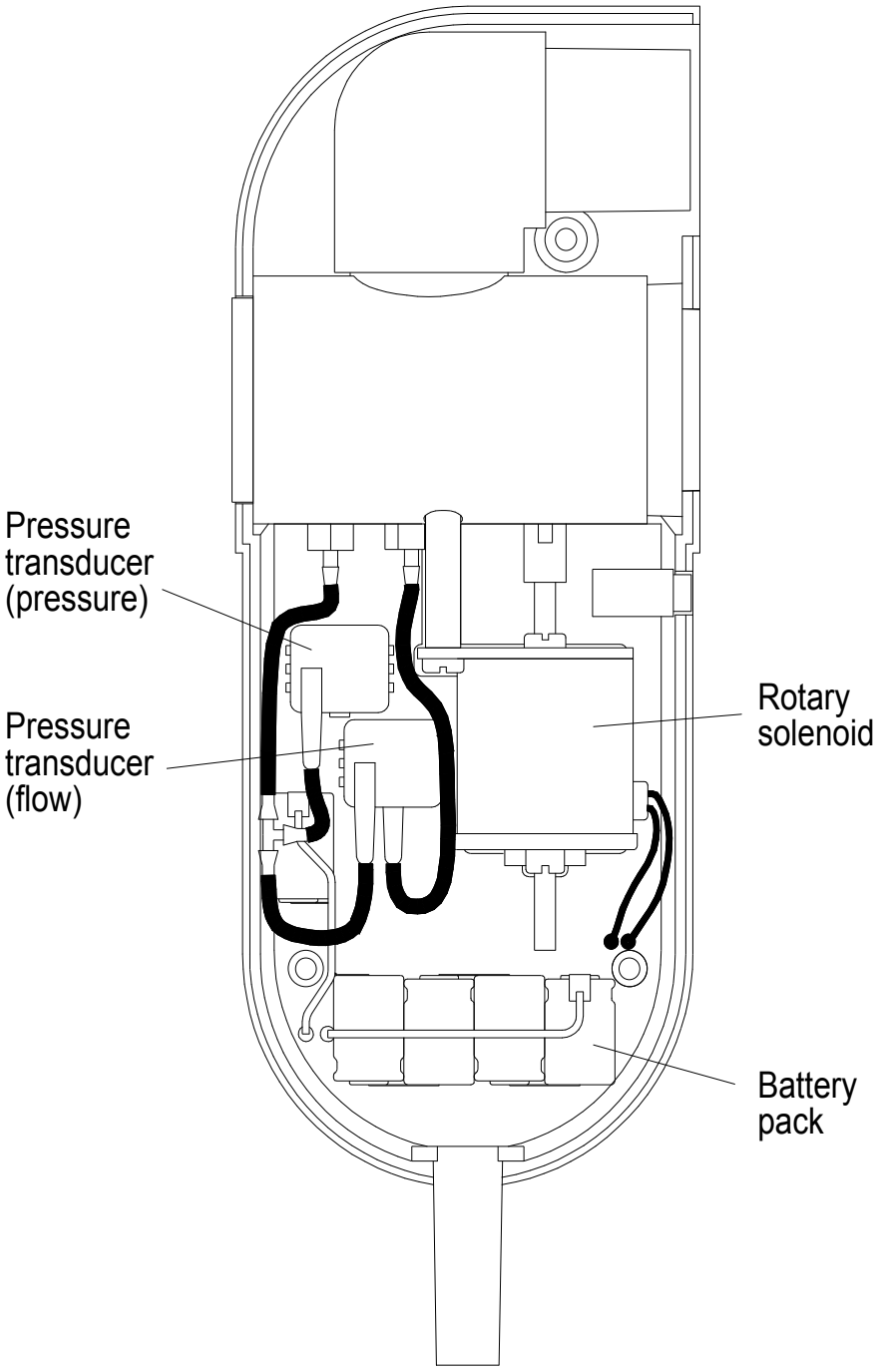

4. The Interrupter Transducer is now ready for fault finding.

Reassembling Interrupter Transducer

1. Push the two mouldings together ensuring that no tubing or wires are caught between the two mouldings.
2. Replace the three screws into the moulding and secure
3. The unit will now require calibration – Refer to operating manual.

Circuit Description – Interrupter Transducer (Refer to Drawing 060-01)

Overview

During measurement the interrupt transducer monitors tidal flow and provides for a means of momentary airways occlusion during which time the pressure at the mouth is measured.
The flow is measured by monitoring the pressure across a resistive element using a high frequency silicon solid-state sensor.
Occlusion is provided by a fast acting rotary solenoid attached to a shutter. During occlusion a second sensor is used to monitor the pressure developed at the mouth.

Power supply

9-volt power is supplied to the transducer from the microcomputer unit at pin 2 of connector J1.
The 9-volt power is regulated down to 5 volts (VCC) by the linear voltage regulator (U4) that provides power for the logic and sensor circuits. A rechargeable 6-volt Ni-cad battery pack supplies the power to the rotary solenoid. The battery pack is trickle charged from the 9V supply by the constant current generated by the current mirror formed by R26, R27, R5, and TR7.

Battery monitor

With the transducer connected to the microcomputer unit, TR5 is saturated as current will pass into its base connection through R16, which is connected to the incoming 9-volt supply. TR5 connects the resistor divider formed by R3 and R4. The output of the divider is connected to channels 2 and 3 of the 12 bit A/D converter, U3, and is read by the microcomputer unit to monitor the battery voltage. TR5 turning off when the incoming 9-volt supply is not present ensures that the battery is not discharged when the transducer is not in use.

Flow measurement

The flow through the transducer is measured by monitoring the pressure drop across the internal resistive element consisting of a stainless steel mesh in a plastic holder.
The pressure transducer, U5, contains a piezo-resistive bridge, whose differential output is amplified by the instrumentation amplifier, U1. The reference for U1, pin 5, is 1.24 volts derived from the 5 volt supply by R7 and R12 and buffered by U7. The output of U1 will thus be centred on 1.24 volts. This voltage is also applied to REFADJ pin of the A/D converter, U3, and gives the A/D converter a full scale input voltage of 2.48 volts. The offset of U5 is nulled using the potentiometer, VR2, to give 1.24 volts at the output of U1 with no flow applied.
The output from U1 is filtered by R19 and C10 and applied to the analogue input, CH0, of the A/D.
The microcomputer unit communicates with the A/D converter using the DIN and DOUT lines synchronously with the serial clock, SCLK. DOUT from the A/D converter is inverted by TR6 to obtain the correct polarity.

Pressure measurement

The pressure transducer, U6, measures the pressure at the mouth. U6 contains a piezo-resistive bridge, whose differential output is amplified by the instrumentation amplifier, U2. The reference for U2, pin 5, is 1.24 volts derived from the 5 volt supply by R7 and R12 and buffered by U7. The output of U2 will thus be centred on 1.24 volts. This voltage is also applied to REFADJ pin of the A/D converter, U3, and gives the A/D converter a full scale input voltage of 2.48 volts. The offset of U6 is nulled using the potentiometer, VR1, to give 1.24 volts at the output of U2 with no flow applied.
The output from U2 is filtered by R18 and C9 and applied to the analogue input, CH1, of the A/D. The microcomputer unit communicates with the A/D converter using the DIN and DOUT lines synchronously with the serial clock, SCLK. DOUT from the A/D converter is inverted by TR6 to obtain the correct polarity.

Shutter Operation

The shutter is closed when the shutter solenoid is energised. This happens when the trigger input at pin 5 of J1 is taken high by the microcomputer unit. When the valve is de-energised the shutter returns to the open position by the action of the internal spring on the solenoid.
The power for the solenoid is taken from the internal 6 volt ni-cad rechargeable battery pack, BAT1. When the trigger input is taken high TR4 is turned on and a pulse, generated through the action of C1 and R8, is applied to the trigger input of a timer, U8. The timer is set by R9 and C3 to supply a 10ms positive pulse at the output, pin3. This pulse will turn on TR2 and TR3 and apply the full battery voltage to the solenoid to ensure rapid closure. In normal operation the solenoid is energised for 100ms. The holding current is supplied through TR1 and R11 and is supplied as long as the trigger input at pin 5 of J1 is high.
The trigger input is also fed to the jack socket J3 which is used when the transducer is connected to the external suction device used for the negative expiratory pressure test, NEP.

Drawing No.	067-00	Date 12/07/02
Revision No. 1.3		Page: 1 OF 3
Designation	Part No.	Description.
U1	BU4S584	Rohm individual CMOS Schmitt invertor, SOT23-5 package
U2	BU4S584	Rohm individual CMOS Schmitt invertor, SOT23-5 package
U3	X1243S8	Xicor clock calander with 256 X 8 bit RAM, SO-8 package
U4	MAX4544EUT-T	Maxim SPDT analogue switch, SOT23-6 package
U5	K9F6408U0A-TCB0	Samsung 8M X 8 bit FLASH memory, TSOP44/40 package
U6	MAX3221CAE	Maxim RS232 transceiver, SSOP16 package
U7	K6T4008V1C-BB70	Samsung 512k X 8 bit CMOS static RAM, SOL32/525 package
U8	BU4S11	Rohm individual CMOS gate, SOT23-5 package
U9	HD64F2318VTE25	Hitachi H8S/2318 microcontroller, TQFP100 package
U10	MAX824TEXK-T	Maxim power monitor, SOT23-5 package
U11	4013	CMOS Dual D Type flip flop, SO-14 package
U12	4093	CMOS Quad NAND Schmitt input gate, SO-14 package
U13	LT1613CS5	Linear Technology DC/DC convertor, SOT23-5 package
U14	LT1613CS5	Linear Technology DC/DC convertor, SOT23-5 package
U15	74LCX32	Quad 2-input OR gate
U16	SED1335FOB	Display driver
U17	LT1613CS5	Linear Technology DC/DC convertor, SOT23-5 package
U18	LM324	Quad surface mount op-amp
U19	GM76C256CLLFW-55-T/R	Gold Star 32K X 8 bit CMOS static RAM, 28 pin SOP package
U20	DS18S20	Dallas semiconductor digital thermometer, TO-92B package
R1		4.7K resistor 1%, 0805 package
R2		4.7K resistor 1%, 0805 package
R3		4.7K resistor 1%, 0805 package
R4		100K resistor 1%, 0805 package
R5		10M resistor 5%, 0805 package
R6		100K resistor 1%, 0805 package
R7		100K resistor 1%, 0805 package
R8		220K resistor 1%, 0805 package
R9		100K resistor 1%, 0805 package
R10		10K resistor 1%, 0805 package
R11		4.7K resistor 1%, 0805 package
R12		10K resistor 1%, 0805 package
R13		10K resistor 1%, 0805 package
R14		10K resistor 1%, 0805 package
R15		100K resistor 1%, 0805 package
R16		100K resistor 1%, 0805 package
R17		10K resistor 1%, 0805 package
R18		10K resistor 1%, 0805 package
R19		100K resistor 1%, 0805 package
R20		100K resistor 1%, 0805 package
R21		10 ohm resistor 1%, 0805 package
R22		1K resistor 1%, 0805 package
R23		150K resistor 1%, 0805 package
R24		68K resistor 1%, 0805 package
R25		91K resistor 1%, 0805 package
R26		100 ohm resistor 1%, 0805 package

Parts List For: MicroLoop MK6

Drawing No.	067-00	Date 12/07/02
Revision No. 1.3		Page: 2 OF 3
Designation	Part No.	Description.
R27		82K resistor 1%, 0805 package
R28		200K resistor 1%, 0805 package
R29		39K resistor 1%, 0805 package
R30		13K resistor 1%, 0805 package
R31		100K resistor 1%, 0805 package
R32	337-729 (F)	82 ohm 1 watt resistor, axial package
R33		100K resistor 1%, 0805 package
R34		100K resistor 1%, 0805 package
R35		10K resistor 1%, 0805 package
R36		10K resistor 1%, 0805 package
R37		1K resistor 1%, 0805 package
R38		1K resistor 1%, 0805 package
RN1	107-048 (F)	6 pin, 5 commoned 100K SIL network
VR1	T18 S/I S/B S/T 20KA	Piher 20K linear potentiometer
C1		22pF Philips or AVX ceramic, 0805 package
C2		47pF Philips or AVX ceramic, 0805 package
C3		1nF Philips or AVX ceramic, 0805 package
C4		1nF Philips or AVX ceramic, 0805 package
C5		100nF Philips or AVX ceramic, X7R dielectric, 0805 package
C6		100nF Philips or AVX ceramic, X7R dielectric, 0805 package
C7		100nF Philips or AVX ceramic, X7R dielectric, 0805 package
C8		100nF Philips or AVX ceramic, X7R dielectric, 0805 package
C9		100nF Philips or AVX ceramic, X7R dielectric, 0805 package
C10	197-324 (F)	47uF/16v Surface mount Tantalum
C11		100nF Philips or AVX ceramic, X7R dielectric, 0805 package
C12		100nF Philips or AVX ceramic, X7R dielectric, 0805 package
C13		100nF Philips or AVX ceramic, X7R dielectric, 0805 package
C14		100nF Philips or AVX ceramic, X7R dielectric, 0805 package
C15		100nF Philips or AVX ceramic, X7R dielectric, 0805 package
C16		100nF Philips or AVX ceramic, X7R dielectric, 0805 package
C17		33pF Philips or AVX ceramic, X7R dielectric, 0805 package
C18		100nF Philips or AVX ceramic, X7R dielectric, 0805 package
C19		33pF Philips or AVX ceramic, X7R dielectric, 0805 package
C20		100nF Philips or AVX ceramic, X7R dielectric, 0805 package
C21		100nF Philips or AVX ceramic, X7R dielectric, 0805 package
C22		1uF Philips or AVX ceramic, X7R dielectric, 0805 package
C23	197-324 (F)	47uF/16v Surface mount Tantalum
C24		1uF Philips or AVX ceramic, X7R dielectric, 0805 package
C25		100nF Philips or AVX ceramic, 0805 package
C26	301-8544 (F)	33uF/16v Surface mount Tantalum
C27	301-8544 (F)	33uF/16v Surface mount Tantalum
C28	301-8544 (F)	33uF/16v Surface mount Tantalum
C29		100nF Philips or AVX ceramic, 0805 package
C30		100nF Philips or AVX ceramic, 0805 package
C31	301-7000 (F)	100uF/16v
C32		100nF Philips or AVX ceramic, 0805 package
C33	301-8593 (F)	47uF/25v Surface mount Tantalum
C34	301-8544 (F)	33uF/16v Surface mount Tantalum

Parts List For: MicroLoop MK6

Drawing No.	067-00	Date 12/07/02
Revision No. 1.3		Page: 3 OF 3
Designation	Part No.	Description.
C35		10pF Philips or AVX ceramic, 0805 package
C36		10pF Philips or AVX ceramic, 0805 package
C37		100nF Philips or AVX ceramic, 0805 package
C38		1uF Philips or AVX ceramic, X7R dielectric, 0805 package
C39		1uF Philips or AVX ceramic, X7R dielectric, 0805 package
C40		1uF Philips or AVX ceramic, X7R dielectric, 0805 package
C41		1uF Philips or AVX ceramic, X7R dielectric, 0805 package
C42		1uF Philips or AVX ceramic, X7R dielectric, 0805 package
C43		1uF Philips or AVX ceramic, X7R dielectric, 0805 package
TR1	DTB113EK	Rohm PNP digital transistor, SOT-23 package
TR2	DTC114EK	Rohm NPN digital transistor, SOT-23 package
TR3	DTC114EK	Rohm NPN digital transistor, SOT-23 package
TR4	DTC114EK	Rohm NPN digital transistor, SOT-23 package
TR5	ZXM62P02E6	P channel MOSFET SOT23-6 package
TR6	ZXM62P02E6	P channel MOSFET SOT23-6 package
TR7	FMMT491	Zetex NPN Transistor SOT-23 package
D1	ZHCS1000	Zetex Schottky diode, SOT-23 package
D2	ZHCS1000	Zetex Schottky diode, SOT-23 package
D3	ZHCS1000	Zetex Schottky diode, SOT-23 package
D4	ZHCS1000	Zetex Schottky diode, SOT-23 package
D5	ZHCS1000	Zetex Schottky diode, SOT-23 package
D6	U1JC44	Toshiba 1A diode
D7	ZHCS1000	Zetex Schottky diode, SOT-23 package
L1	NLFC453232-3R3M	3.3uH inductor, 1210 package
L2	NLFC453232-3R3M	3.3uH inductor, 1210 package
L3	353-1340 (F)	22uH inductor, 1210 package
L4	353-1340 (F)	22uH inductor, 1210 package
L5	353-1340 (F)	22uH inductor, 1210 package
L6	353-1340 (F)	22uH inductor, 1210 package
F1	MICROSMD035-2	Tyco 700mA Polyswitch
DISPLAY	LTA75R227J	Nan Ya 240 X 160 graphic display
J1	95001-2661	Molex 6 way data socket
J2	18FMN-BMTTN-TF	18 way 1mm pitch cable connector from JST
J3	MDS4	4 way mini DIN socket
J4	14FMN-BMTTN-TF	14 way 1mm pitch cable connector from JST
J5		2 way 0.1" pitch pin header
J6		2.5mm DC power socket from G.English
J7		3 way 0.1" pitch pin header
BAT1	B2B-PH-K-S	2 way PCB socket from JST
SPKR	PKM35-4A0	Murata piezo ceramic sounder
X1	571-672 (F)	32.768 KHz crystal, WATCH package
X2		20MHz crystal, HC49/4H package
X3	485-081 (F)	10MHz crystal
	067-09	Sanyo NI CAD battery pack
		M1.7 X 3mm screw
		M1.7 plain washer
	067-15	14 way ribbon cable for keypad
	067-13	PCB Iss 1

Parts List - Interrupter Transducer

Designation	Description
U1	**(AD623ARM)** INSTRUMENTATION AMPLIFIER
U2	**(AD623ARM)** INSTRUMENTATION AMPLIFIER
U3	**(MAX1247BCEE)** SERIAL 12 BIT A/D CONVERTER
U4	**(LM2931M-5.0)** LOW DROP OUT 5 VOLT REGULATOR
U5	**(SDXL005D4)** 5" DIFFERENTIAL PRESSURE TRANSDUCER
U6	**(SDXL005D4)** 5" DIFFERENTIAL PRESSURE TRANSDUCER
U7	**(MAX4241EUA)** OP-AMP
U8	**(LM555CM)** TIMER
TR1	**(FMMT717)** PNP TRANSISTOR
TR2	**(FMMT617)** NPN TRANSISTOR
TR3	**(FMMT717)** PNP TRANSISTOR
TR4	**(FMMT617)** NPN TRANSISTOR
TR5	**(FMMT617)** NPN TRANSISTOR
TR6	**(DMMBT2369LT1)** HIGH SPEED SWITCHING NPN TRANSISTOR
TR7	**(BCV62C)** MATCHED PNP TRANSISTOR PAIR
R1	390 OHM SURFACE MOUNT RESISTOR 0.125 WATT 5% SIZE 0805
R2	820 OHM SURFACE MOUNT RESISTOR 0.125 WATT 5% SIZE 0805
R3	100K SURFACE MOUNT RESISTOR 0.125 WATT 5% SIZE 0805
R4	33K SURFACE MOUNT RESISTOR 0.125 WATT 5% SIZE 0805
R5	39 OHM SURFACE MOUNT RESISTOR 0.125 WATT 5% SIZE 0805
R6	390 OHM SURFACE MOUNT RESISTOR 0.125 WATT 5% SIZE 0805
R7	100K SURFACE MOUNT RESISTOR 0.125 WATT 5% SIZE 0805
R8	10K SURFACE MOUNT RESISTOR 0.125 WATT 5% SIZE 0805
R9	120K SURFACE MOUNT RESISTOR 0.125 WATT 5% SIZE 0805
R10	150 OHM SURFACE MOUNT RESISTOR 0.125 WATT 5% SIZE 0805
R11	3.9 OHM 1 WATT 5% RESISTOR
R12	33K SURFACE MOUNT RESISTOR 0.125 WATT 5% SIZE 0805
R13	390 OHM SURFACE MOUNT RESISTOR 0.125 WATT 5% SIZE 0805
R14	10K SURFACE MOUNT RESISTOR 0.125 WATT 1% SIZE 0805
R15	47 OHM SURFACE MOUNT RESISTOR 0.125 WATT 1% SIZE 0805
R16	1M SURFACE MOUNT RESISTOR 0.125 WATT 1% SIZE 0805
R17	470 OHM SURFACE MOUNT RESISTOR 0.125 WATT 1% SIZE 0805
R18	15K SURFACE MOUNT RESISTOR 0.125 WATT 1% SIZE 0805
R19	150K SURFACE MOUNT RESISTOR 0.125 WATT 1% SIZE 0805
R20	1K SURFACE MOUNT RESISTOR 0.125 WATT 1% SIZE 0805
R21	1K SURFACE MOUNT RESISTOR 0.125 WATT 1% SIZE 0805
R22	1M SURFACE MOUNT RESISTOR 0.125 WATT 1% SIZE 0805
R23	1.5K SURFACE MOUNT RESISTOR 0.125 WATT 1% SIZE 0805
R24	1M SURFACE MOUNT RESISTOR 0.125 WATT 1% SIZE 0805
R25	1M SURFACE MOUNT RESISTOR 0.125 WATT 5% SIZE 0805
R26	33 OHM SURFACE MOUNT RESISTOR 0.125 WATT 5% SIZE 0805
R27	33 OHM SURFACE MOUNT RESISTOR 0.125 WATT 5% SIZE 0805
R28	100 OHM SURFACE MOUNT RESISTOR 0.125 WATT 5% SIZE 0805
R29	1K SURFACE MOUNT RESISTOR 0.125 WATT 5% SIZE 0805
C1	100nF MULTILAYER CERAMIC CAPACITOR SIZE 0805
C2	100nF MULTILAYER CERAMIC CAPACITOR SIZE 0805
C3	100nF MULTILAYER CERAMIC CAPACITOR SIZE 0805

C4	47uF ELECTROLYTIC CAPACITOR SIZE UWX6.3
C5	47uF ELECTROLYTIC CAPACITOR SIZE UWX6.3
C6	10nF MULTILAYER CERAMIC CAPACITOR SIZE 0805
C7	100nF MULTILAYER CERAMIC CAPACITOR SIZE 0805
C8	100nF MULTILAYER CERAMIC CAPACITOR SIZE 0805
C9	10nF MULTILAYER CERAMIC CAPACITOR SIZE 0805
C10	10nF MULTILAYER CERAMIC CAPACITOR SIZE 0805
D1	LOW CURRENT YELLOW 3mm LED
D2	**(BAS19)** GENERAL PURPOSE SMALL SIGNAL DIODE
D3	**(BAS19)** GENERAL PURPOSE SMALL SIGNAL DIODE
D4	**(BAS19)** GENERAL PURPOSE SMALL SIGNAL DIODE
BAT	5 x 1/3AA SIZE 110mA-hr SANYO BATTERY PACK
J1	6 WAY PIN HEADER
J2	**(GDAY 025 X20 B25)** EMMESEM ROTARY SOLENOID 6.8V 7% DUTY 1.25 OHMS 65 DEG

Fault Analysis

The following analysis is only a guideline and should be carried out in a logical sequence. If the fault is still apparent after the following suggestions then the unit should be fault found using the circuit descriptions and circuit diagrams provided.

When the unit is turned on there is no display present

-Rotate contrast thumb wheel anti-clockwise to see if screen darkens.
-Connect charger to see if screen darkens and charging light illuminates.

When the unit is turned on the display is dark purple

-Rotate contrast thumb wheel clockwise to see if screen colour becomes lighter and characters are displayed.
-Connect charger to see if screen characters appear.

The recorded values are low

-Ensure that the unit is calibrated – Refer to operating manual.
-Ensure that the mouthpiece holder is fully inserted into the interrupter transducer unit.
-Check that the resistive element is not damaged.
-Check that there are no leaks in the patient circuit. If a mouthpiece is used, then check that there are no leaks around the patient's mouth and that a nose-clip has been used. If a facemask is used then check that it is held firmly against the face.

The shutter does not activate

-Check that the battery low message is not displayed on the LCD display
-Ensure that the interrupter transducer is connected to the microcomputer unit.

Technical Support

Great Britain and World Headquarters

Micro Medical Ltd

PO Box 6

Rochester

Kent ME1 2AZ

Telephone + 44 (0)1634 360044

Fax +44 (0)1634 360055

Web Site http://www.micromedical.com.uk

Email support@micromedical.com.uk

Contact Micro Medical Ltd for the local agent in your region or country for local service:

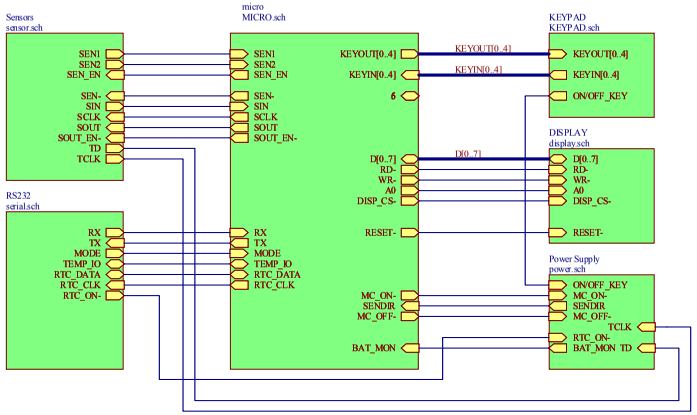

Title	MicroLoop - circuit overview	
Size: A3	Number: 067-01	Revision: 1.0
Date: 6-Nov-2002		Sheet of
File: H:\TEMP\067-01.sch		Drawn By: D.E.COCKS

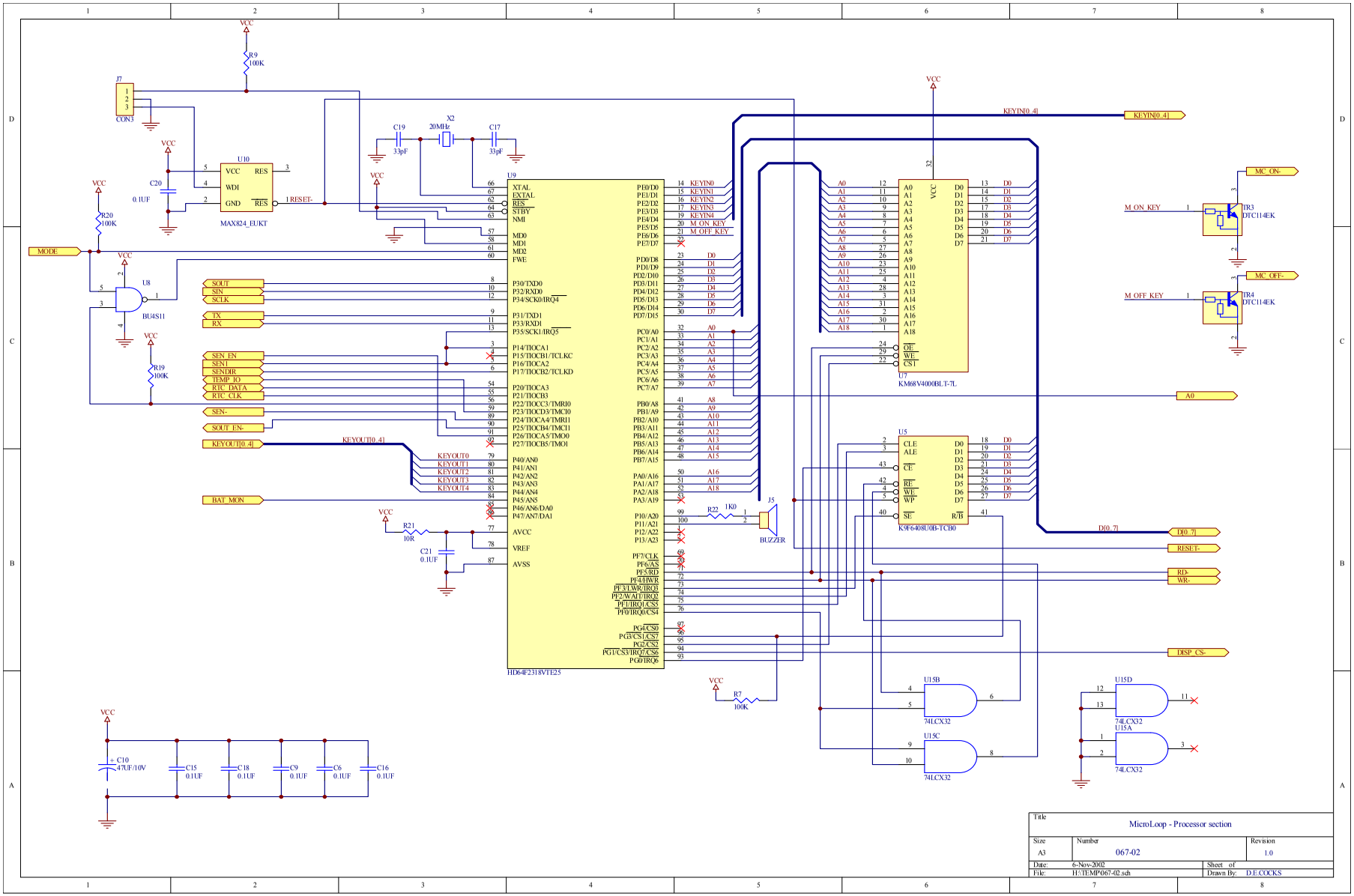
VCC
R9
100K
J7
CON3
U10
MAX824_EUKT
C20
0.1UF
R20
100K
MODE
U8
BU4S11
R19
100K
C19
33pF
X2
20MHz
C17
33pF
U9
HD64F2318VTE25
SOUT
SIN
SCLK
TX
RX
SEN_EN
SENT
SENDER
TEMP_IO
RTC_DATA
RTC_CLK
SEN-
SOUT_EN-
KEYOUT[0..4]
BAT_MON
KEYOUT0
KEYOUT1
KEYOUT2
KEYOUT3
KEYOUT4
R21
10K
C21
0.1UF
R22
1K0
J5
BUZZER
R7
100K
KEYIN[0..4]
KEYIN0
KEYIN1
KEYIN2
KEYIN3
KEYIN4
M_ON_KEY
M_OFF_KEY
U7
KM68V4000BLT-7L
U5
K9F6408U0B-TCB0
D[0..7]
A0
MC_ON-
MC_OFF-
TR3
DTC114EK
TR4
DTC114EK
RESET-
RD-
WR-
DISP_CS-
U15B
U15C
U15D
U15A
74LCX32
C10
47UF/10V
C15
0.1UF
C18
0.1UF
C9
0.1UF
C6
0.1UF
C16
0.1UF
Title
MicroLoop - Processor section
Size
A3
Number
067-02
Revision
1.0
Date:
6-Nov-2002
Sheet of
File:
H:\TEMP\067-02.sch
Drawn By:
D.E.COCKS

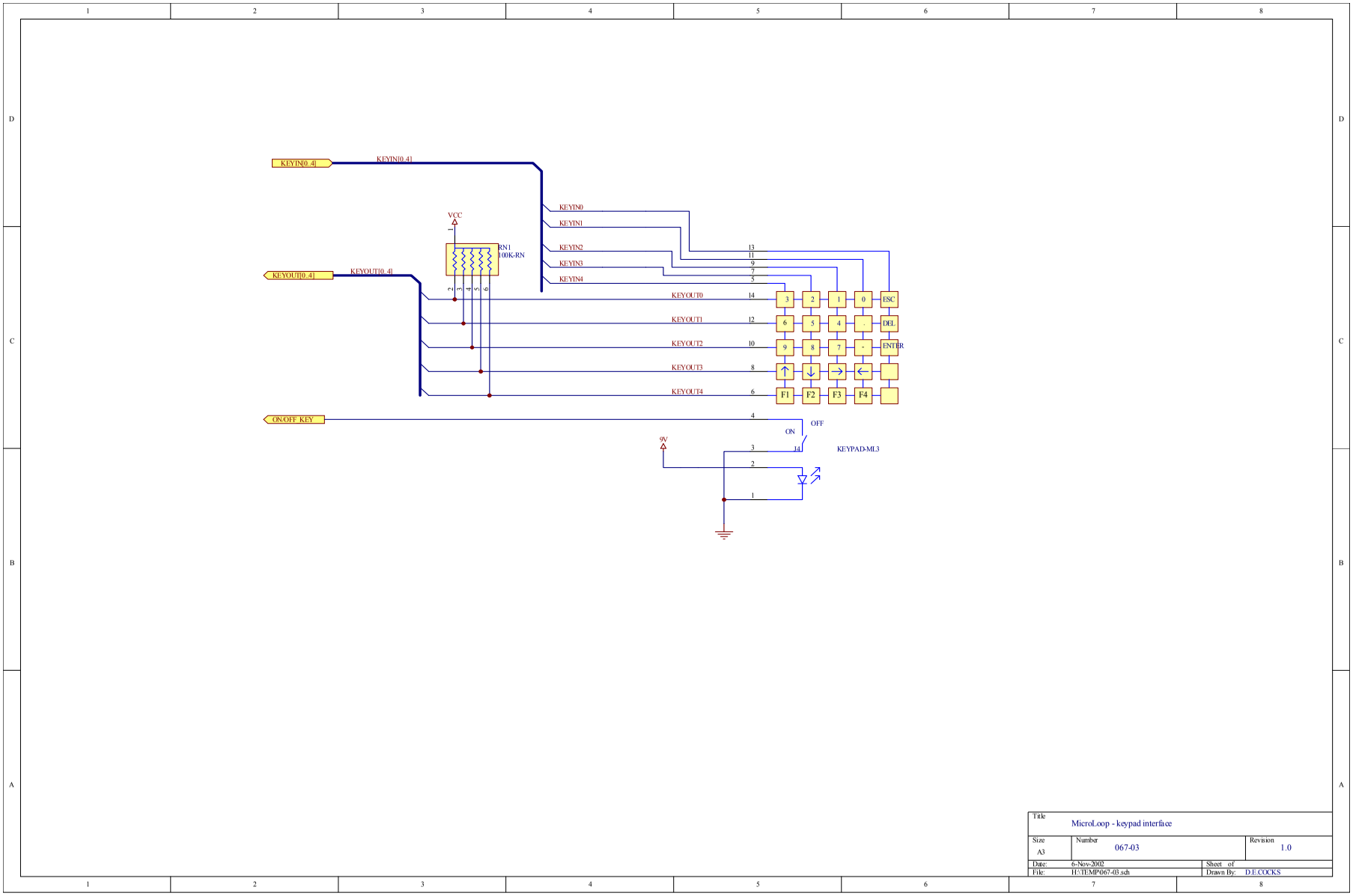
KEYIN[0..4]
KEYIN[0..4]
KEYIN0
KEYIN1
KEYIN2
KEYIN3
KEYIN4
VCC
RN1
100K-RN
KEYOUT[0..4]
KEYOUT[0..4]
KEYOUT0
KEYOUT1
KEYOUT2
KEYOUT3
KEYOUT4
3
2
1
0
ESC
6
5
4
.
DEL
9
8
7
-
ENTER
F1
F2
F3
F4
ON/OFF_KEY
OFF
ON
9V
KEYPAD-ML3
Title
MicroLoop - keypad interface
Size
A3
Number
067-03
Revision
1.0
Date:
6-Nov-2002
Sheet of
File:
H:\TEMP\067-03.sch
Drawn By:
D.E.COCKS

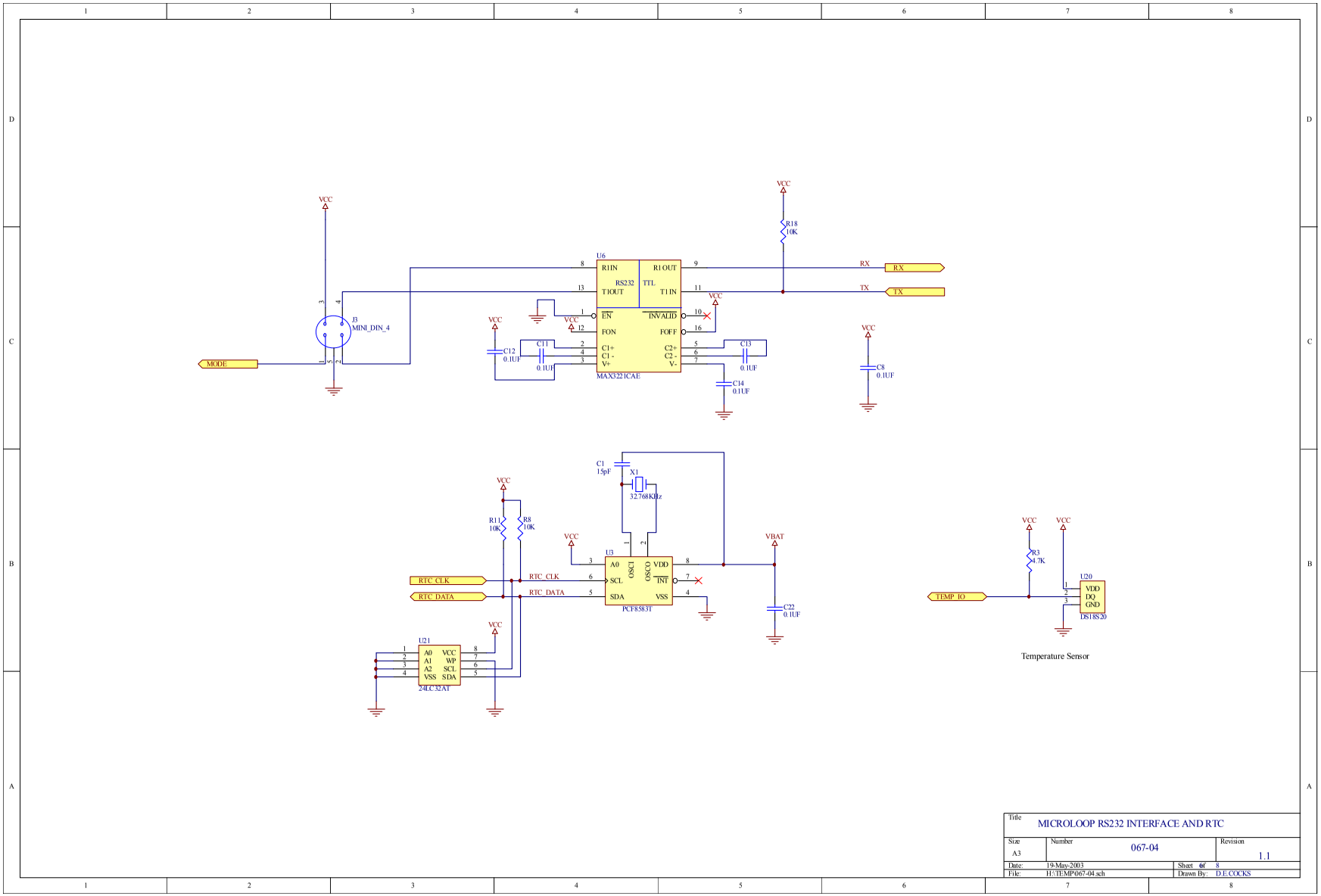
VCC
R18
10K
U6
R1IN
R1 OUT
RS232
TTL
T1OUT
T1 IN
EN
INVALID
FON
FOFF
C1+
C2+
C1 -
C2 -
V+
V-
MAX322 ICAE
RX
TX
J3
MINI_DIN_4
MODE
C12
0.1UF
C11
0.1UF
C13
0.1UF
C14
0.1UF
C8
0.1UF
C1
15pF
X1
32.768KHz
R11
10K
R8
10K
U3
A0
OSCI
OSCO
VDD
SCL
INT
SDA
VSS
PCF8583T
RTC_CLK
RTC_DATA
VBAT
C22
0.1UF
U21
A0
A1
A2
VSS
VCC
WP
SCL
SDA
24LC32AT
R3
4.7K
U20
VDD
DQ
GND
DS18S20
TEMP_IO
Temperature Sensor
Title
MICROLOOP RS232 INTERFACE AND RTC
Size
A3
Number
067-04
Revision
1.1
Date:
19-May-2003
Sheet of
8
File:
H:\TEMP\067-04.sch
Drawn By:
D.E.COCKS

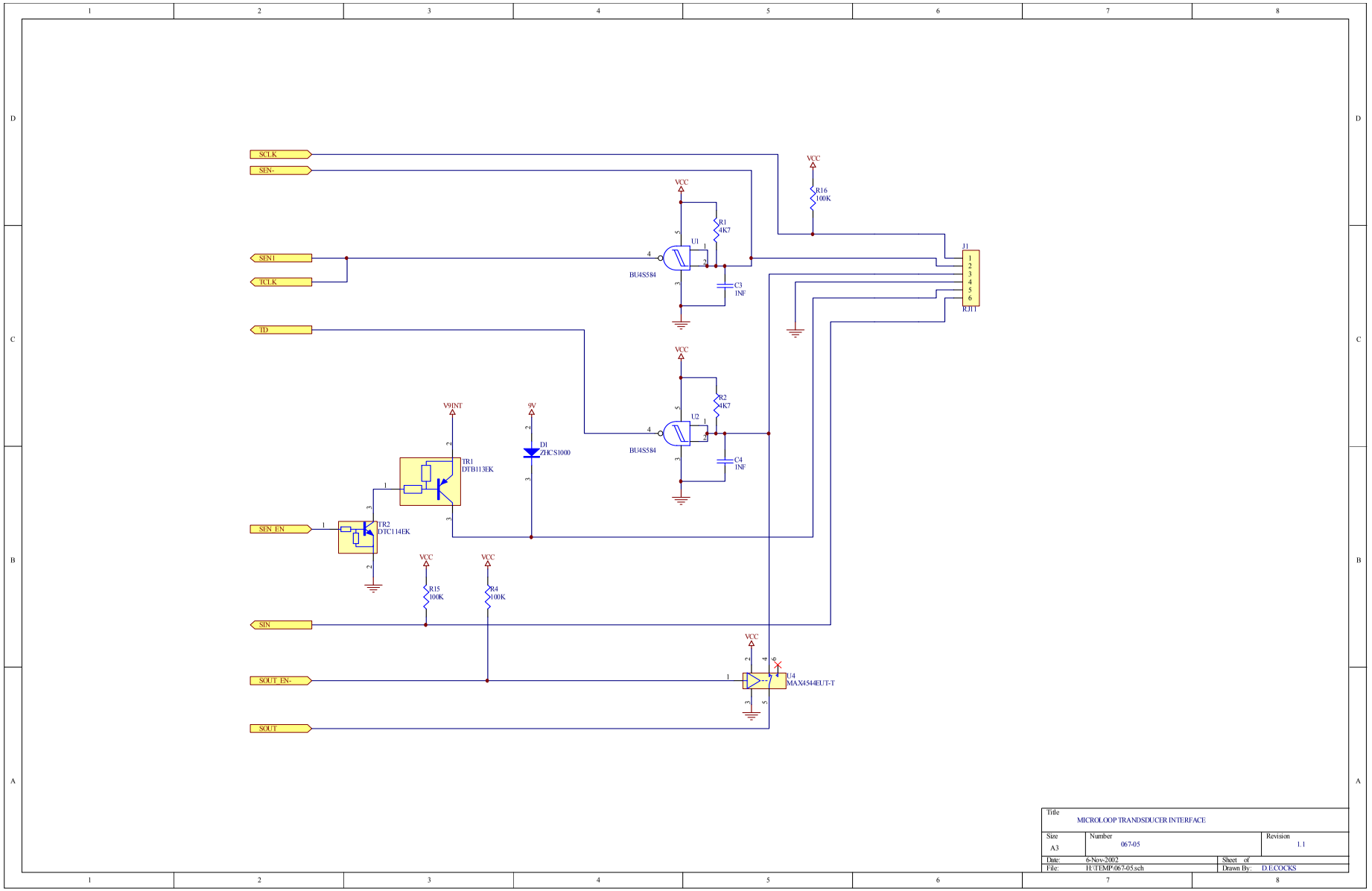
SCLK
SEN-
SEN1
TCLK
TD
SIN
SOUT_EN-
SOUT
SEN_EN
VCC
R16
100K
R1
4K7
U1
BU4S584
C3
1NF
J1
RJ11
R2
4K7
U2
C4
1NF
V9INT
9V
D1
ZHCS1000
TR1
DTB113EK
TR2
DTC114EK
R15
100K
R4
100K
U4
MAX4544EUT-T
Title
MICROLOOP TRANSDUCER INTERFACE
Size
A3
Number
067-05
Revision
1.1
Date:
6-Nov-2002
Sheet of
File:
H:\TEMP\067-05.sch
Drawn By:
D.E.COCKS

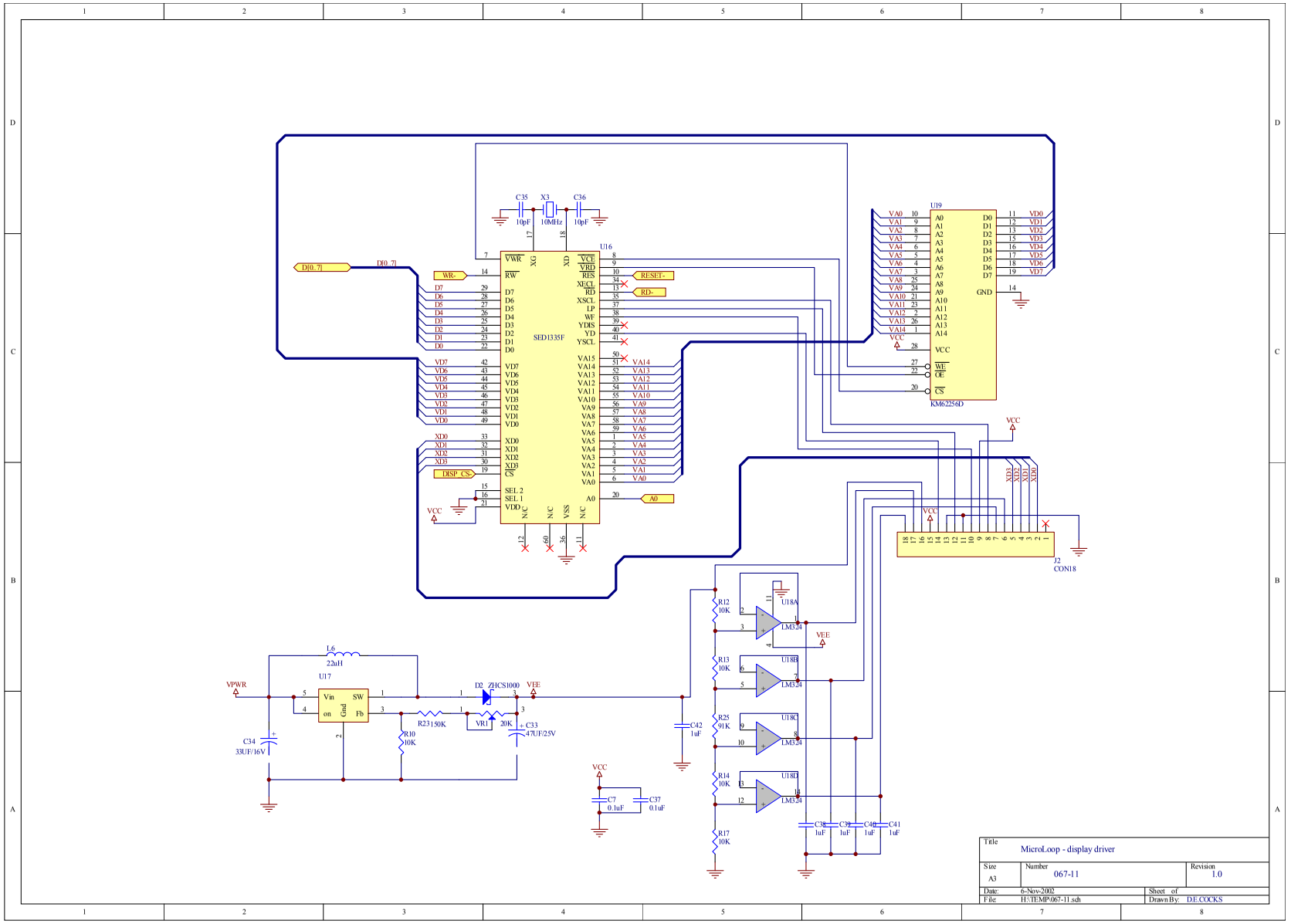

SED1335F
U16
U19
KM62256D
J2
CON18
U17
U18A
U18B
U18C
U18D
LM324
D2 ZHCS1000
VPWR
VEE
VCC
Title
MicroLoop - display driver
Size
A3
Number
067-11
Revision
1.0
Date: 6-Nov-2002
Sheet of
File: H:\TEMP\067-11.sch
Drawn By: D.E.COCKS

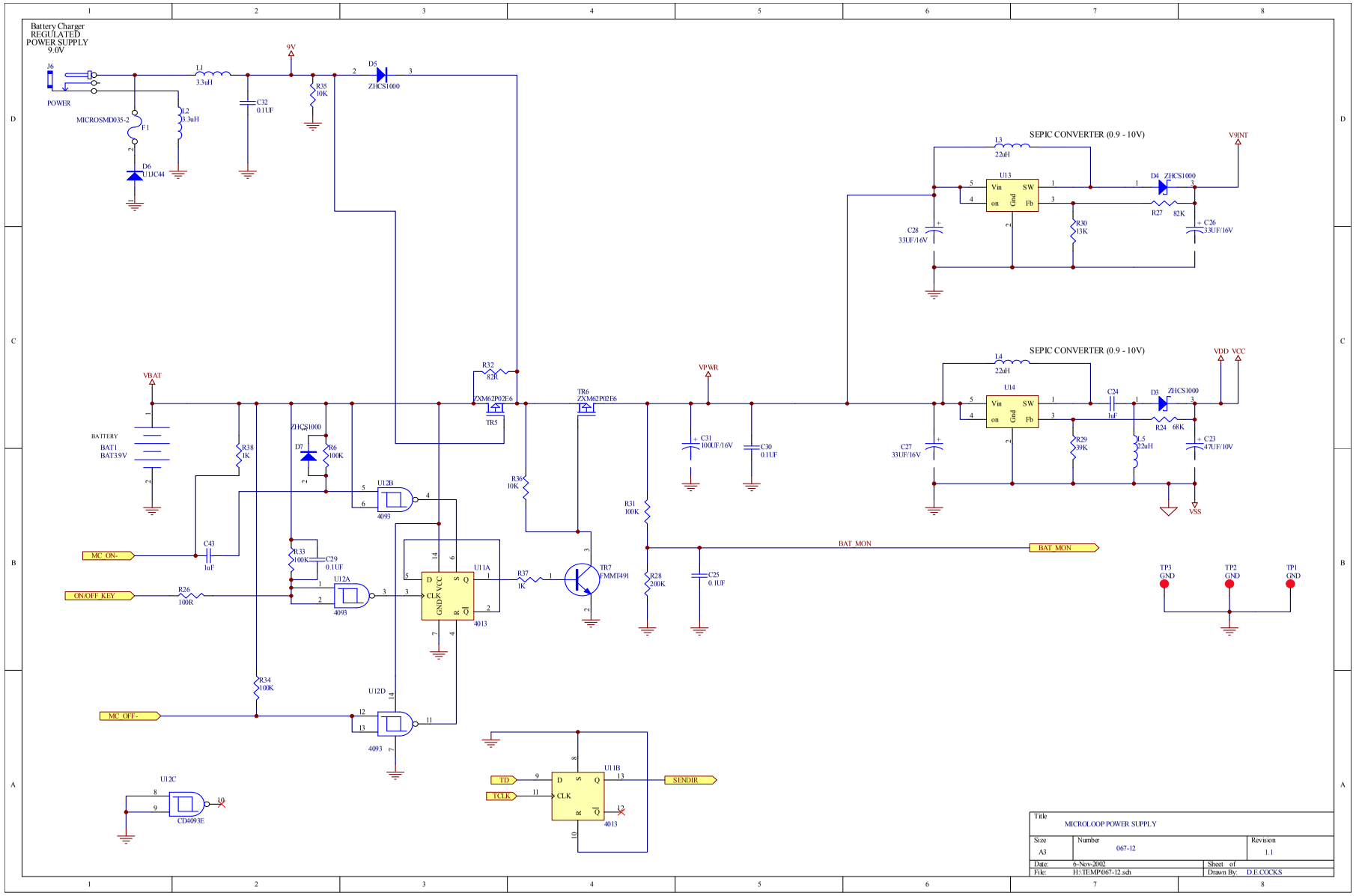
Battery Charger
REGULATED
POWER SUPPLY
9.0V
J6
POWER
MICROSMD035-2
F1
L1
3.3uH
L2
3.3uH
C32
0.1UF
9V
R35
10K
D5
ZHCS1000
D6
U1JC44
SEPIC CONVERTER (0.9 - 10V)
L3
22uH
U13
Vin
SW
on
Gnd
Fb
D4 ZHCS1000
R27 82K
C28
33UF/16V
R30
13K
C26
33UF/16V
V9INT
SEPIC CONVERTER (0.9 - 10V)
L4
22uH
U14
C24
1uF
D3 ZHCS1000
R24 68K
C27
33UF/16V
R29
39K
L5
22uH
C23
47UF/10V
VDD VCC
VSS
VBAT
BATTERY
BAT1
BAT3.9V
R38
1K
R32
82K
ZXM62P02E6
TR5
TR6
ZXM62P02E6
VPWR
C31
100UF/16V
C30
0.1UF
ZHCS1000
D7
R6
100K
U12B
4093
R36
10K
R31
100K
R28
200K
C25
0.1UF
BAT_MON
BAT_MON
MC_ON-
C43
1uF
R33
100K
C29
0.1UF
U12A
4093
ON/OFF_KEY
R26
100R
U11A
4013
R37
1K
TR7
FMMT491
R34
100K
U12D
4093
MC_OFF-
U12C
CD4093E
U11B
4013
TD
TCLK
SENDIR
TP3
GND
TP2
GND
TP1
GND
Title
MICROLOOP POWER SUPPLY
Size
A3
Number
067-12
Revision
1.1
Date:
6-Nov-2002
Sheet of
File:
H:\TEMP\067-12.sch
Drawn By:
D.E.COCKS

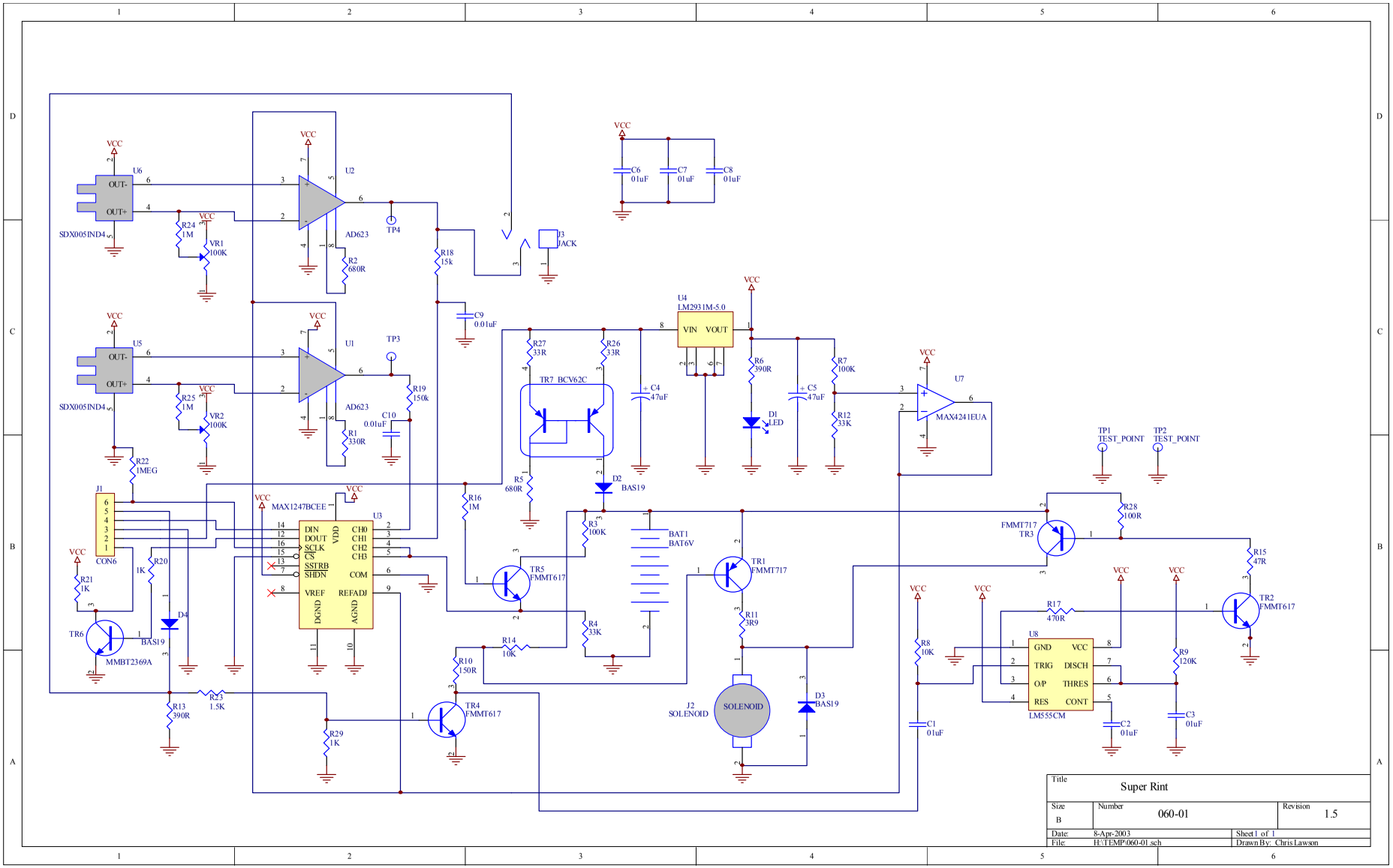
VCC
U6
OUT-
OUT+
SDX005IND4
R24 1M
VR1 100K
U2
AD623
R2 680R
TP4
J3 JACK
R18 15k
C9 0.01uF
U5
SDX005IND4
R25 1M
VR2 100K
U1
AD623
C10 0.01uF
R1 330R
TP3
R19 150k
R22 1MEG
J1
CON6
R21 1K
R20 1K
TR6 MMBT2369A
D4 BAS19
R13 390R
R23 1.5K
MAX1247BCEE
U3
DIN
DOUT
SCLK
CS
SSTRB
SHDN
VREF
REFADJ
DGND
AGND
CH0
CH1
CH2
CH3
COM
VDD
R29 1K
TR4 FMMT617
R10 150R
R14 10K
R4 33K
TR5 FMMT617
R16 1M
R5 680R
R3 100K
D2 BAS19
R27 33R
R26 33R
TR7 BCV62C
C6 01uF
C7 01uF
C8 01uF
C4 47uF
U4 LM2931M-5.0
VIN
VOUT
R6 390R
D1 LED
C5 47uF
R7 100K
R12 33K
U7 MAX4241EUA
BAT1 BAT6V
TR1 FMMT717
R11 3R9
J2 SOLENOID
SOLENOID
D3 BAS19
TP1 TEST_POINT
TP2 TEST_POINT
FMMT717 TR3
R28 100R
R15 47R
TR2 FMMT617
R17 470R
U8
GND
TRIG
O/P
RES
VCC
DISCH
THRES
CONT
LM555CM
R8 10K
R9 120K
C1 01uF
C2 01uF
C3 01uF
Title
Super Rint
Size
B
Number
060-01
Revision
1.5
Date:
8-Apr-2003
Sheet 1 of 1
File:
H:\TEMP\060-01.sch
Drawn By: Chris Lawson